Cambridge International AS & A Level

Cambridge International Examinations
Cambridge International Advanced Subsidiary and Advanced Level

CANDIDATE NAME									
CENTRE NUMBER						CANDIDATE NUMBER				

9721936842

PHYSICS **9702/23**

Paper 2 AS Level Structured Questions **October/November 2016**

1 hour 15 minutes

Candidates answer on the Question Paper.

No Additional Materials are required.

READ THESE INSTRUCTIONS FIRST

Write your Centre number, candidate number and name on all the work you hand in.
Write in dark blue or black pen.
You may use an HB pencil for any diagrams or graphs.
Do not use staples, paper clips, glue or correction fluid.
DO **NOT** WRITE IN ANY BARCODES.

Answer **all** questions.

Electronic calculators may be used.
You may lose marks if you do not show your working or if you do not use appropriate units.

At the end of the examination, fasten all your work securely together.
The number of marks is given in brackets [ ] at the end of each question or part question.

This document consists of **13** printed pages and **3** blank pages.

DC (AL) 132149
© UCLES 2016

CAMBRIDGE International Examinations

Data

speed of light in free space	$c = 3.00 \times 10^{8}\,\text{m s}^{-1}$
permeability of free space	$\mu_0 = 4\pi \times 10^{-7}\,\text{H m}^{-1}$
permittivity of free space	$\varepsilon_0 = 8.85 \times 10^{-12}\,\text{F m}^{-1}$
	$(\frac{1}{4\pi\varepsilon_0} = 8.99 \times 10^{9}\,\text{m F}^{-1})$
elementary charge	$e = 1.60 \times 10^{-19}\,\text{C}$
the Planck constant	$h = 6.63 \times 10^{-34}\,\text{J s}$
unified atomic mass unit	$1\,\text{u} = 1.66 \times 10^{-27}\,\text{kg}$
rest mass of electron	$m_e = 9.11 \times 10^{-31}\,\text{kg}$
rest mass of proton	$m_p = 1.67 \times 10^{-27}\,\text{kg}$
molar gas constant	$R = 8.31\,\text{J K}^{-1}\,\text{mol}^{-1}$
the Avogadro constant	$N_A = 6.02 \times 10^{23}\,\text{mol}^{-1}$
the Boltzmann constant	$k = 1.38 \times 10^{-23}\,\text{J K}^{-1}$
gravitational constant	$G = 6.67 \times 10^{-11}\,\text{N m}^2\,\text{kg}^{-2}$
acceleration of free fall	$g = 9.81\,\text{m s}^{-2}$

© UCLES 2016

Formulae

uniformly accelerated motion	$s = ut + \frac{1}{2}at^2$ $v^2 = u^2 + 2as$
work done on/by a gas	$W = p\Delta V$
gravitational potential	$\phi = -\frac{Gm}{r}$
hydrostatic pressure	$p = \rho gh$
pressure of an ideal gas	$p = \frac{1}{3}\frac{Nm}{V}\langle c^2 \rangle$
simple harmonic motion	$a = -\omega^2 x$
velocity of particle in s.h.m.	$v = v_0 \cos \omega t$ $v = \pm \omega \sqrt{(x_0^2 - x^2)}$
Doppler effect	$f_o = \frac{f_s v}{v \pm v_s}$
electric potential	$V = \frac{Q}{4\pi\varepsilon_0 r}$
capacitors in series	$1/C = 1/C_1 + 1/C_2 + \ldots$
capacitors in parallel	$C = C_1 + C_2 + \ldots$
energy of charged capacitor	$W = \frac{1}{2}QV$
electric current	$I = Anvq$
resistors in series	$R = R_1 + R_2 + \ldots$
resistors in parallel	$1/R = 1/R_1 + 1/R_2 + \ldots$
Hall voltage	$V_H = \frac{BI}{ntq}$
alternating current/voltage	$x = x_0 \sin \omega t$
radioactive decay	$x = x_0 \exp(-\lambda t)$
decay constant	$\lambda = \frac{0.693}{t_{\frac{1}{2}}}$

© UCLES 2016

[Turn over

BLANK PAGE

© UCLES 2016

Answer **all** the questions in the spaces provided.

1 **(a)** Define *density*.

.....

.....[1]

(b) The mass m of a metal sphere is given by the expression

$$m = \frac{\pi d^3 \rho}{6}$$

where ρ is the density of the metal and d is the diameter of the sphere.

Data for the density and the mass are given in Fig. 1.1.

quantity	value	uncertainty
ρ	$8100\,\text{kg m}^{-3}$	± 5%
m	7.5 kg	± 4%

Fig. 1.1

(i) Calculate the diameter d.

d = ... m [1]

(ii) Use your answer in **(i)** and the data in Fig. 1.1 to determine the value of d, with its absolute uncertainty, to an appropriate number of significant figures.

d = ... ± ..... m [3]

[Total: 5]

2 **(a)** Define *electric field strength*.

.....

.....[1]

(b) A potential difference of 2.5 kV is applied across a pair of horizontal metal plates in a vacuum, as shown in Fig. 2.1.

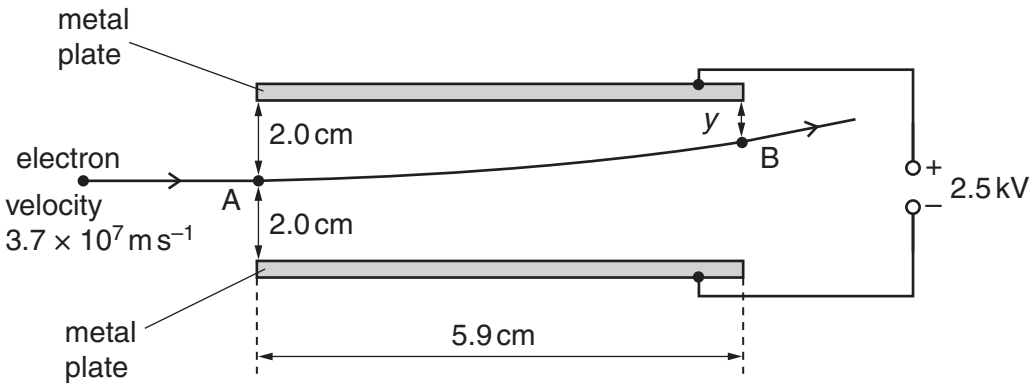

Fig. 2.1 (not to scale)

Each plate has a length of 5.9 cm. The separation of the plates is 4.0 cm. The arrangement produces a uniform electric field between the plates.
Assume the field does not extend beyond the edges of the plates.

An electron enters the field at point A with horizontal velocity $3.7 \times 10^7\,\text{m s}^{-1}$ along a line mid-way between the plates. The electron leaves the field at point B.

(i) Calculate the time taken for the electron to move from A to B.

time taken = ... s [1]

(ii) Calculate the magnitude of the electric field strength.

field strength = ... N C^{-1} [2]

(iii) Show that the acceleration of the electron in the field is $1.1 \times 10^{16}\,\text{m s}^{-2}$.

[2]

© UCLES 2016

(iv) Use the acceleration given in **(iii)** and your answer in **(i)** to determine the vertical distance y between point B and the upper plate.

y = ... cm [3]

(v) Explain why the calculation in **(iv)** does not need to include the gravitational effects on the electron.

.....

.....[1]

(vi) The electron enters the field at time $t = 0$.

On Fig. 2.2, sketch graphs to show the variation with time t of

1. the horizontal component v_X of the velocity of the electron,

2. the vertical component v_Y of the velocity of the electron.

Numerical values are not required.

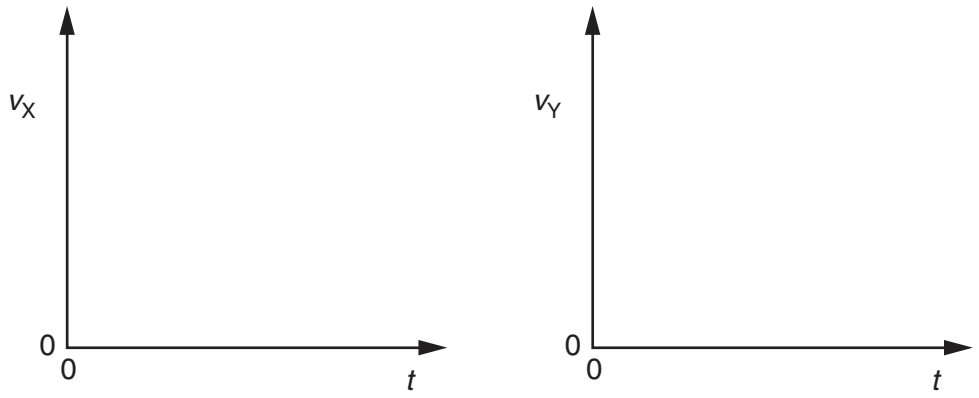

Fig. 2.2

[2]

[Total: 12]

3 **(a)** State Hooke's law.

.....

.....[1]

(b) The variation with compression x of the force F acting on a spring is shown in Fig. 3.1.

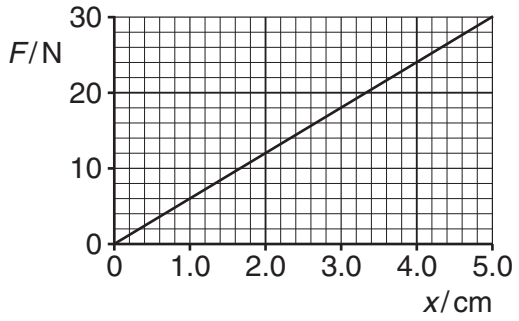

Fig. 3.1

The spring is fixed to the closed end of a horizontal tube. A block is pushed into the tube so that the spring is compressed, as shown in Fig. 3.2.

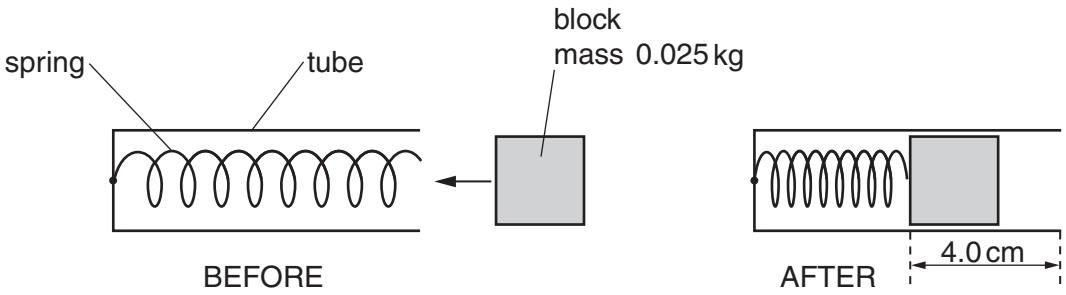

Fig. 3.2 (not to scale)

The compression of the spring is 4.0 cm. The mass of the block is 0.025 kg.

(i) Calculate the spring constant of the spring.

spring constant = ... $N\,m^{-1}$ [2]

© UCLES 2016

(ii) Show that the work done to compress the spring by 4.0 cm is 0.48 J.

[2]

(iii) The block is now released and accelerates along the tube as the spring returns to its original length. The block leaves the end of the tube with a speed of 6.0 m s^{-1}.

1. Calculate the kinetic energy of the block as it leaves the end of the tube.

kinetic energy = ... J [2]

2. Assume that the spring has negligible kinetic energy as the block leaves the tube. Determine the average resistive force acting against the block as it moves along the tube.

resistive force = ... N [3]

(iv) Determine the efficiency of the transfer of elastic potential energy from the spring to the kinetic energy of the block.

efficiency = ... [2]

[Total: 12]

© UCLES 2016

[Turn over

4 **(a)** State what is meant by the *frequency* of a progressive wave.

.....

.....

.....[2]

(b) A cathode-ray oscilloscope (c.r.o.) is used to determine the frequency of the sound emitted by a loudspeaker. The trace produced on the screen of the c.r.o. is shown in Fig. 4.1.

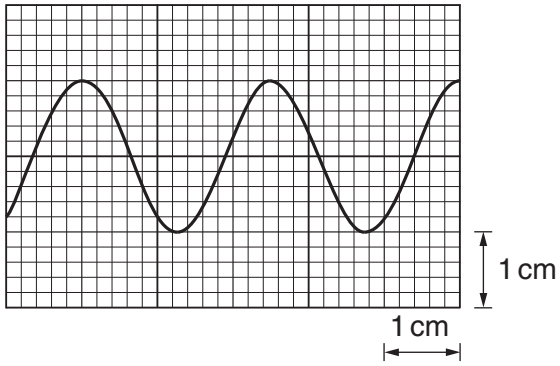

Fig. 4.1

The time-base setting of the c.r.o. is 250 μs cm^{-1}.

Show that the frequency of the sound wave is 1600 Hz.

[2]

(c) The loudspeaker in **(b)** emits the sound in all directions. A person attaches the loudspeaker to a string and then swings the loudspeaker at a constant speed in a horizontal circle above his head.

An observer, standing a large distance away from the loudspeaker, hears sound of maximum frequency 1640 Hz. The speed of sound in air is 330 m s^{-1}.

(i) Determine the speed of the loudspeaker.

speed = ... m s^{-1} [2]

© UCLES 2016

(ii) Describe and explain, qualitatively, the variation in the frequency of the sound heard by the observer.

.....

.....

.....

.....

.....[2]

[Total: 8]

5 **(a)** State what is meant by the *diffraction* of a wave.

.....

.....[2]

(b) Laser light of wavelength 500 nm is incident normally on a diffraction grating. The resulting diffraction pattern has diffraction maxima up to and including the fourth-order maximum.

Calculate, for the diffraction grating, the minimum possible line spacing.

line spacing = ... m [3]

(c) The light in **(b)** is now replaced with red light. State and explain whether this is likely to result in the formation of a fifth-order diffraction maximum.

.....

.....

.....

.....[2]

[Total: 7]

6 **(a)** Define electric *potential difference* (*p.d.*).

.....

.....[1]

(b) A battery of electromotive force (e.m.f.) 14 V and negligible internal resistance is connected to a resistor network, as shown in Fig. 6.1.

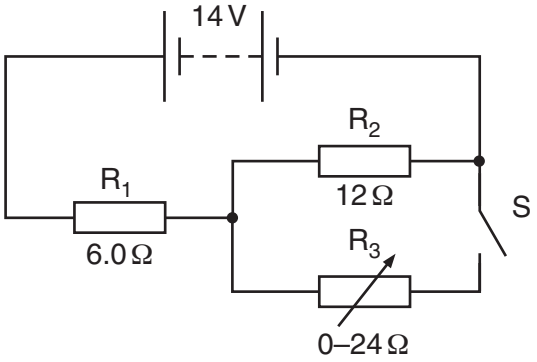

Fig. 6.1

R_1 and R_2 are fixed resistors of resistances 6.0 Ω and 12 Ω respectively. R_3 is a variable resistor.

Switch S is **closed**.

(i) Calculate the current in the battery when the resistance of R_3 is set

1. at zero,

current = ... A [2]

2. at 24 Ω.

current = ... A [2]

© UCLES 2016

(ii) Use your answers in **(b)(i)** to calculate the change in the total power produced by the battery when the resistance of R_3 is changed from zero to 24 Ω.

change in power = ... W [2]

(c) Switch S in Fig. 6.1 is now **opened**.

Resistors R_1 and R_2 are made from metal wires. Some data for these resistors are shown in Fig. 6.2.

	R_1	R_2
cross-sectional area of wire	A	$1.8A$
number of free electrons per unit volume in metal	n	$0.50n$

Fig. 6.2

Determine the ratio

$$\frac{\text{average drift speed of free electrons in } R_1}{\text{average drift speed of free electrons in } R_2}.$$

ratio = ... [2]

[Total: 9]

7 **(a)** State **one** difference between a hadron and a lepton.

.....

.....[1]

(b) **(i)** State the quark composition of a proton and of a neutron.

proton: .....

neutron: .....
[2]

(ii) Use your answer in **(i)** to determine the quark composition of an α-particle.

quark composition: .....[1]

(c) The results of the α-particle scattering experiment provide evidence for the structure of the atom.

result 1: The vast majority of α-particles pass straight through the metal foil or are deviated by small angles.

result 2: A very small minority of α-particles are scattered through angles greater than 90°.

State what may be inferred from

(i) result 1,

.....

.....[1]

(ii) result 2.

.....

.....

.....

.....[2]

[Total: 7]

© UCLES 2016

BLANK PAGE

© UCLES 2016

BLANK PAGE

Permission to reproduce items where third-party owned material protected by copyright is included has been sought and cleared where possible. Every reasonable effort has been made by the publisher (UCLES) to trace copyright holders, but if any items requiring clearance have unwittingly been included, the publisher will be pleased to make amends at the earliest possible opportunity.

To avoid the issue of disclosure of answer-related information to candidates, all copyright acknowledgements are reproduced online in the Cambridge International Examinations Copyright Acknowledgements Booklet. This is produced for each series of examinations and is freely available to download at www.cie.org.uk after the live examination series.

Cambridge International Examinations is part of the Cambridge Assessment Group. Cambridge Assessment is the brand name of University of Cambridge Local Examinations Syndicate (UCLES), which is itself a department of the University of Cambridge.

© UCLES 2016